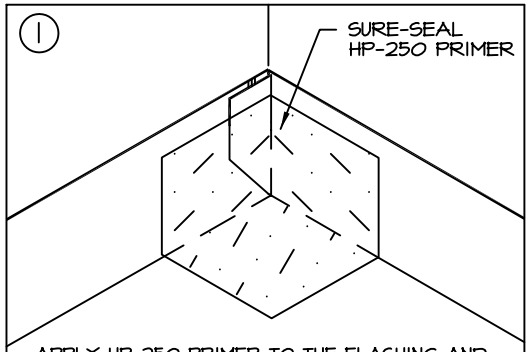

APPLY HP-250 PRIMER TO THE FLASHING AND ONTO THE DECK MEMBRANE WHERE THE PRESSURE-SENSITIVE INSIDE CORNER IS TO BE INSTALLED.

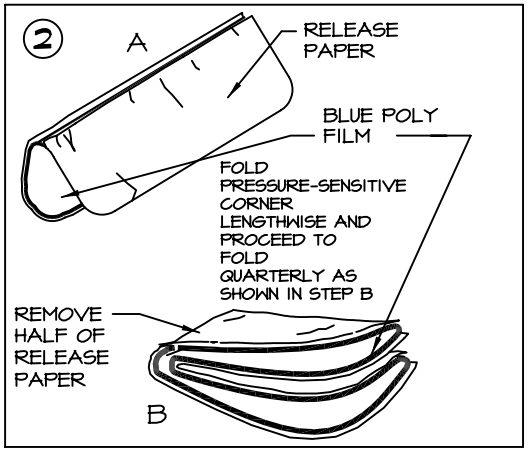

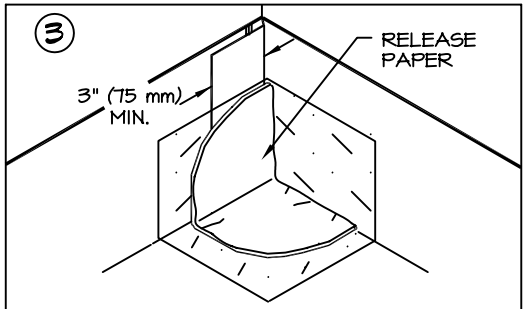

PLACE QUARTER SECTION ONTO DECK WITH LONG FOLDED SIDE FACING THE WALL. REMOVE REMAINING RELEASE PAPER. PRESS FIRMLY AND PROCEED WITH SECOND QUARTER GOING UP THE VERTICAL WALL BY PRESSING FIRMLY INTO CORNER.

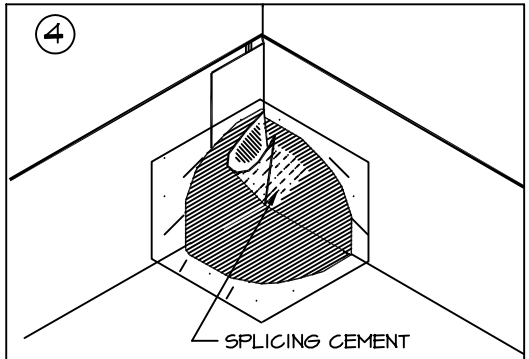

REMOVE BLUE POLY FILM AND FORM PIG EAR. APPLY SPLICING CEMENT TO THE PIG EAR AND ADHERE TO THE WALL.

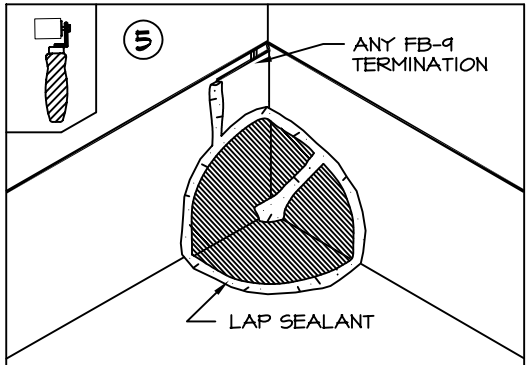

ROLL WITH 2" (50 mm) WIDE STEEL HAND ROLLER. SEAL ALL EXPOSED EDGES AND FOLD WITH SURE-SEAL LAP SEALANT.

FB-15-F
SURE-SEAL® PRESSURE-SENSITIVE INSIDE CORNER

CARLISLE
Carlisle SynTec Incorporated

© 2006 CARLISLE SYNTEC INCORPORATED