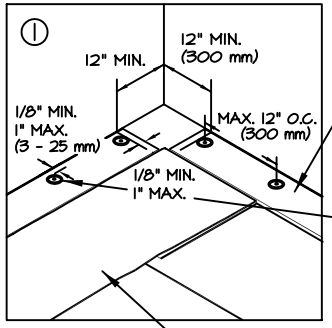

9" (230 mm) WIDE .045" REINFORCED EPDM MEMBRANE (RUSS)

SURE-SEAL SEAM FASTENING PLATE AND SURE-SEAL FASTENER MAX. 12" (300 mm) O.C.

SURE-SEAL® 145-MIL FleeceBACK® MEMBRANE

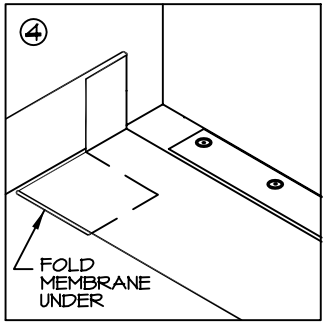

COMPLETE VERTICAL SPLICE AND APPLY 3" (75 mm) WIDE SURE-SEAL SecurTAPE TO THE SPLICE EDGE AS SHOWN

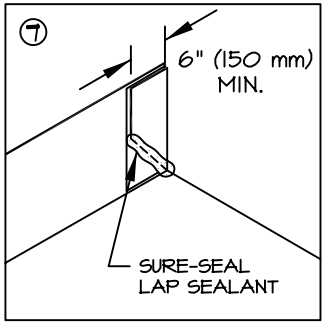

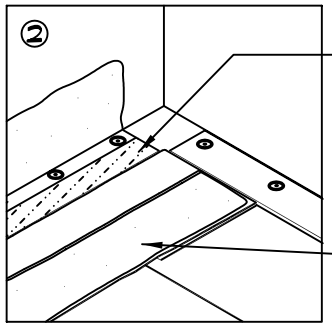

6" (150 mm) WIDE SecurTAPE

SURE-SEAL BONDING ADHESIVE

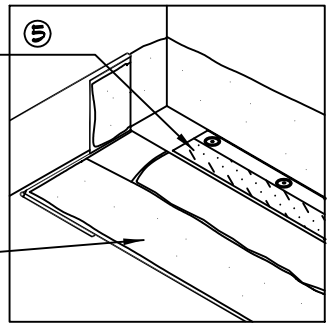

APPROX. 9" X 9" (230 x 230 mm) SURE-SEAL PRESSURE-SENSITIVE ELASTOFORM FLASHING (SIMILAR TO DETAIL X3FB-15A)

SURE-SEAL PRESSURE-SENSITIVE ELASTOFORM FLASHING MUST BE USED IN CONJUNCTION WITH PRIMER

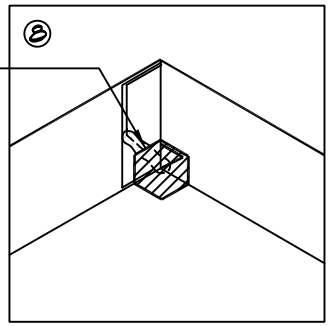

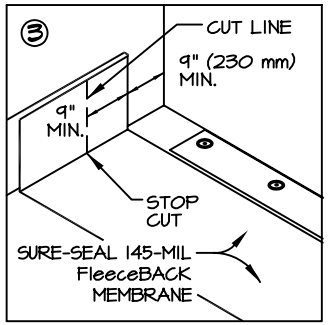

NOTE:

FOR RUSS SECUREMENT, REFER TO DETAIL X3FB-12B.

SURE-SEAL 6" (150 mm) WIDE SecurTAPE

SURE-SEAL 90 MIL EPDM MEMBRANE

CUT 45°

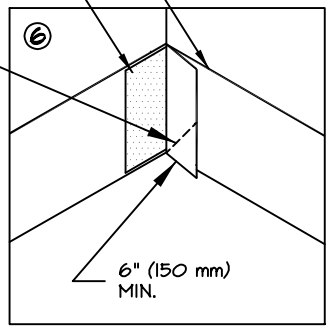

APPLY 9" X 9" (230 x 230 mm) SURE-SEAL PRESSURE-SENSITIVE ELASTOFORM FLASHING ON DECK MEMBRANE AND 9" x 12" (230 x 300 mm) PRESSURE-SENSITIVE ELASTOFORM FLASHING ON WALL AT CORNER AS SHOWN (SIMILAR TO DETAIL X3FB-15A)

SEAL ALL EDGES WITH LAP SEALANT (SIMILAR TO DETAIL X3FB-15A)

ANY X3A-9 TERMINATION

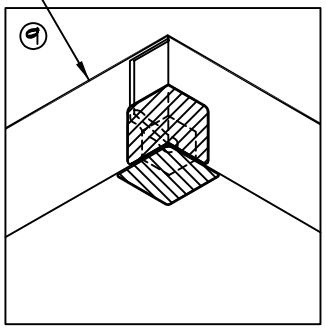

30-YEAR WARRANTY

X3FB-15B

INSIDE CORNER WITH CONTINUOUS EPDM WALL FLASHING

CARLISLE

Carlisle SynTec Incorporated

© 2007 CARLISLE SYNTEC INCORPORATED